Microreactor Engineering

Goran Jovanovic
Oregon State University
School of Chemical, Biological, and Environmental Engineering

Homogenous Reactions in Microreactors

In Affiliation With:

MBI

Microproducts Breakthrough Institute

PTT - LOA

PTT - Laboratories Of America

Microtechnology

The study, development, and application of devices whose operation is based on the scale of 1-100 microns.

(A human hair is approximately 100 micrometers thick.)

Homogenous Reactions

Consider a microchannel vessel with characteristic dimension (width or radius) of approximately *R* ≈ 100 μm, and length *L*, where *L*>>>*R* In addition consider that a homogenous non-catalytic chemical reaction of known kinetics takes place in this microreactor vessel.

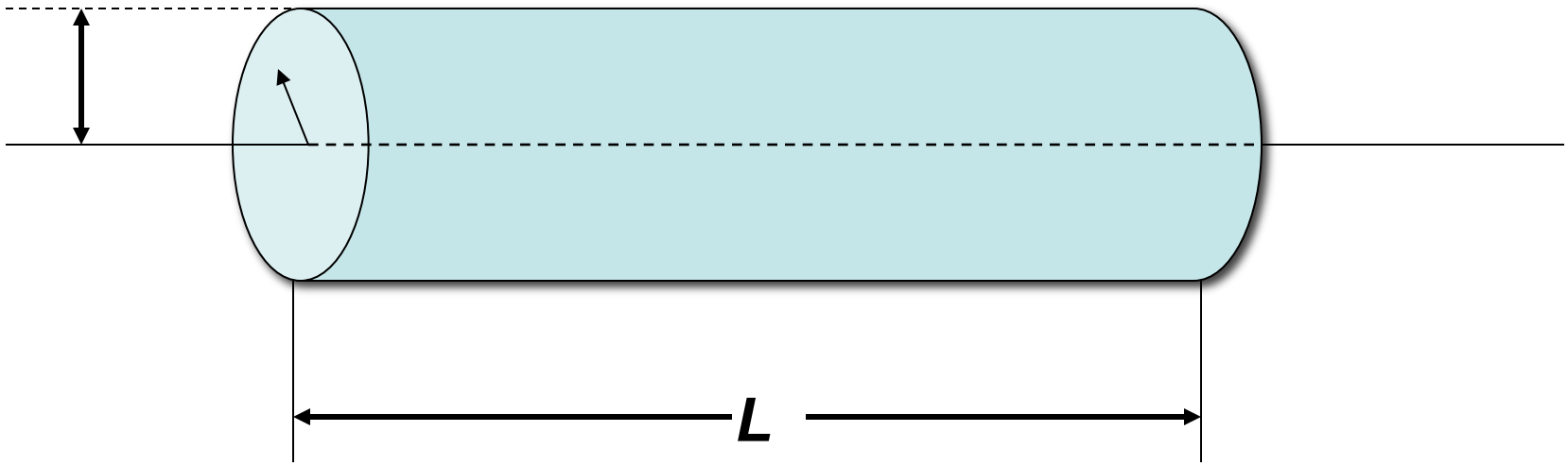

Geometric aspect ratio: $\frac{R}{L} <<< 1$

Let us also consider a homogenous fluid that enters the microchannel vessel at average velocity $\bar{v}_z$ containing a reactant *A* that undergoes noncatalytic transformation:

$$A \overset{k}{\Longrightarrow} B$$

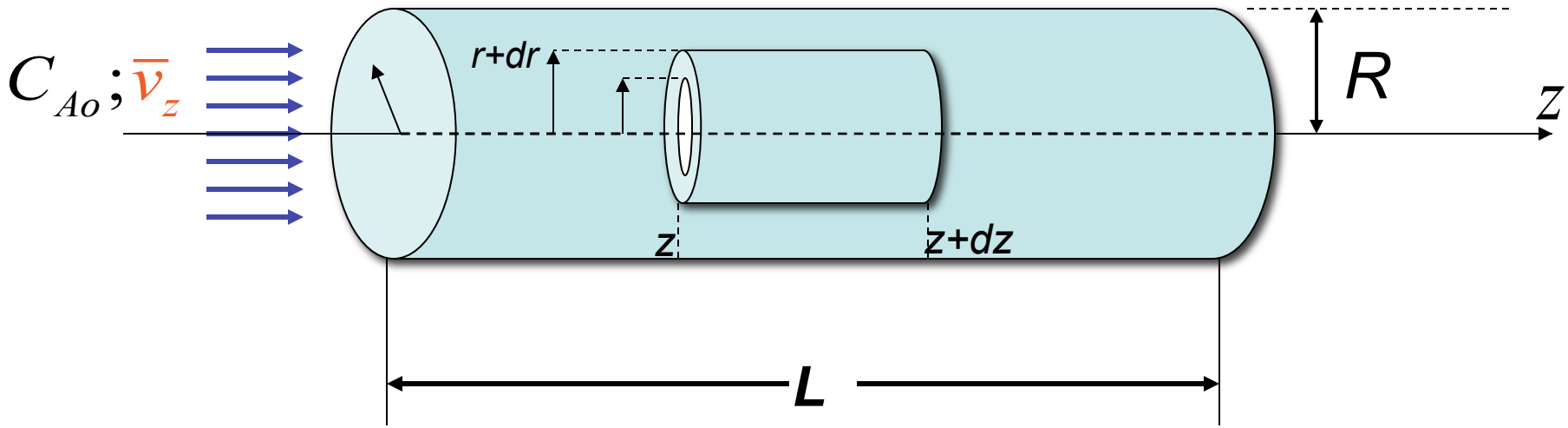

$$-\frac{dC_A}{dt} = kC_A \left[\frac{mol}{m^3 s}\right]$$

Homogenous Reactions

$$A \overset{k}{\Rightarrow} B \qquad -\frac{dC_A}{dt} = kC_A$$

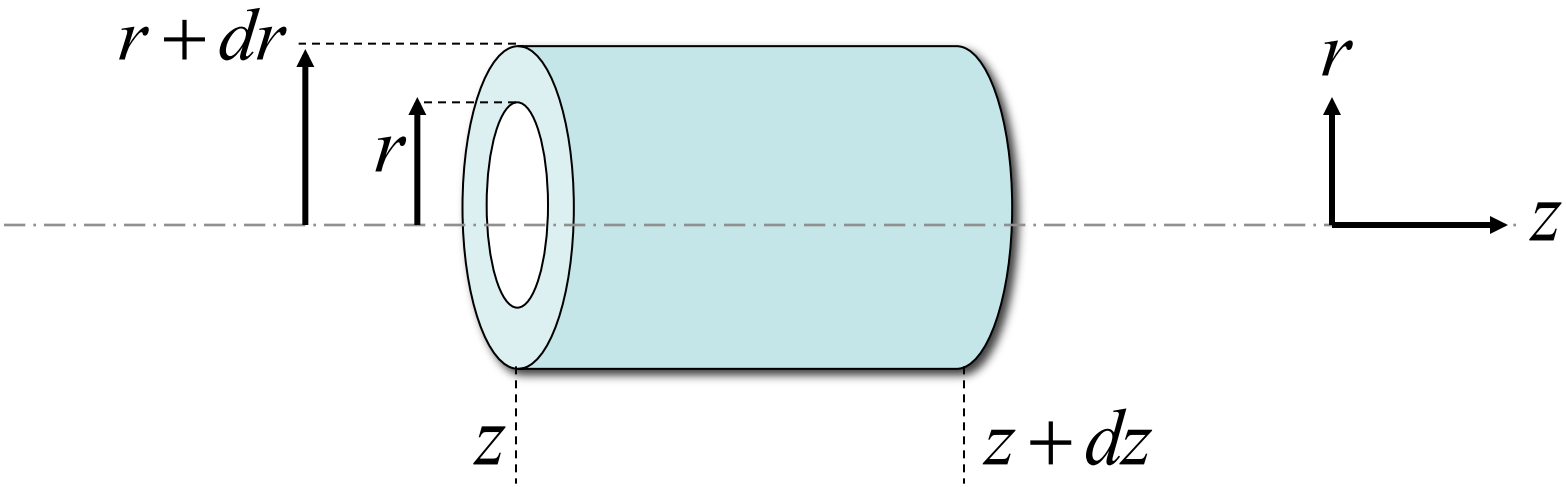

Homogenous Reactions

$$A \overset{k}{\Rightarrow} B \qquad -\frac{dC_A}{dt} = kC_A$$

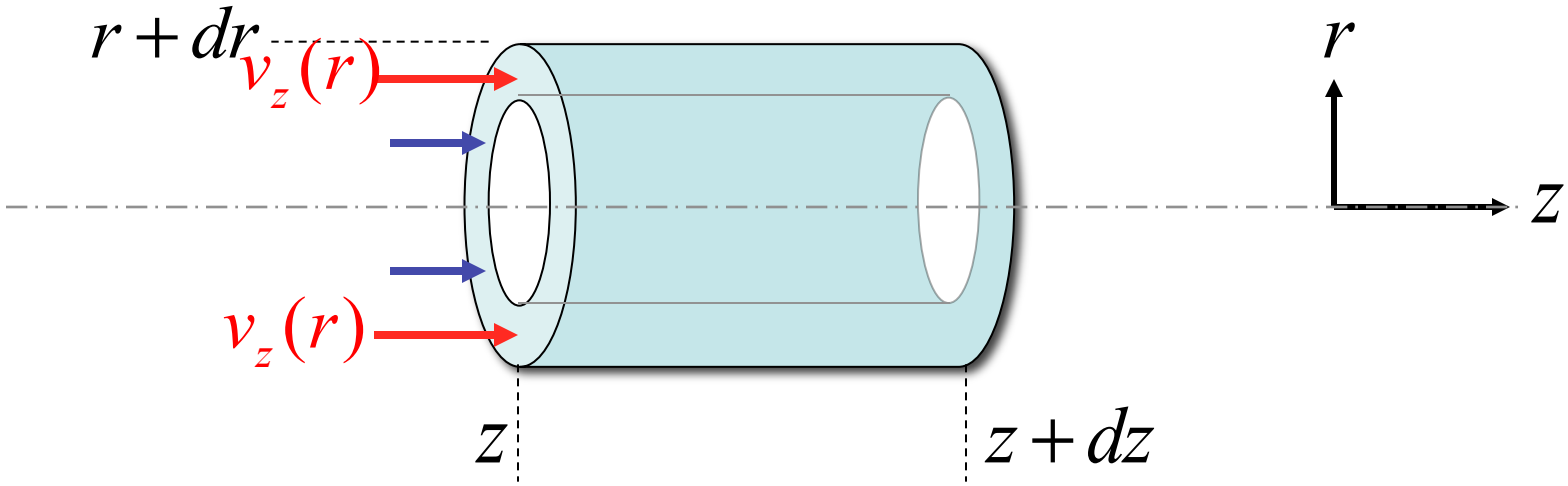

material entering at **z** by convection:

$$v_z(r) \cdot 2\pi r \cdot dr \cdot C_A(z,r)\Big|_z \cdot \Delta t\,[mol]$$

material entering *at* **z**by diffusion:

$$-D_A 2\pi r \cdot dr \cdot \frac{\partial C_A(z,r)}{\partial z}\Bigg|_z \cdot \Delta t\,[mol]$$

Similarly, we have convective and diffusive mass transfer at the other end of the differential fluid volume:

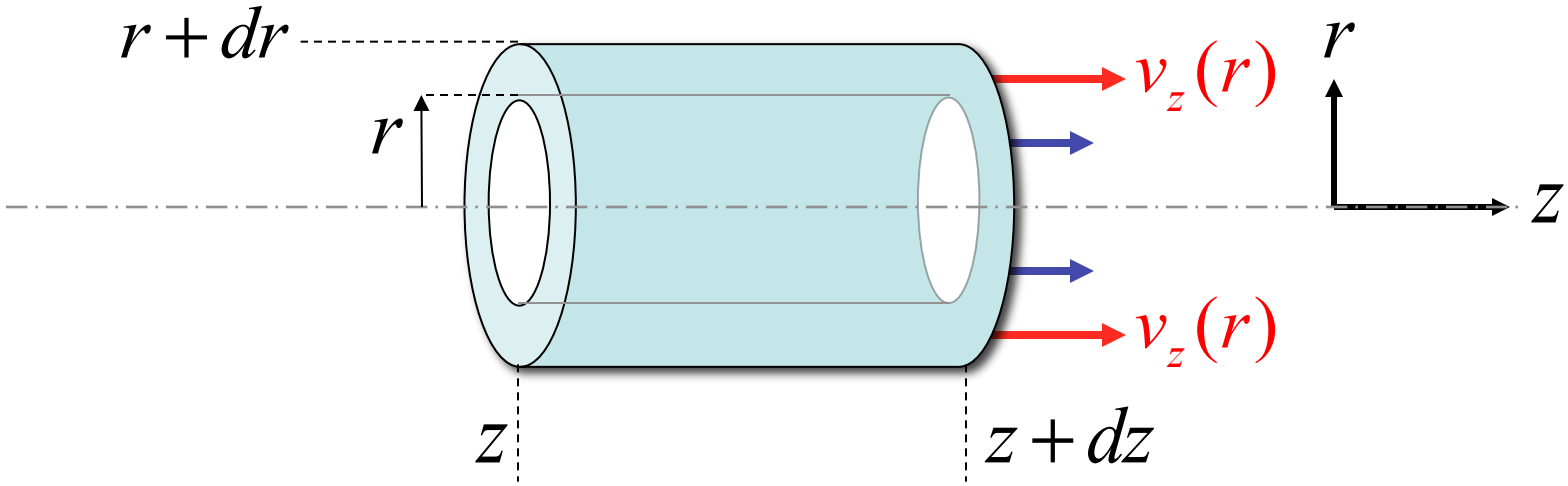

material leaving at ***z+dz*** by convection:

$$v_z(r)\cdot 2\pi r\cdot dr\cdot C_A(z,r)\Big|_{z+dz}\cdot \Delta t\,[mol]$$

material leaving at ***z+dz*** by diffusion:

$$-D_A 2\pi r\cdot dr\cdot \frac{\partial C_A(z,r)}{\partial z}\Bigg|_{z+dz}\cdot \Delta t\,[mol]$$

There is also diffusive mass transfer in the radial direction IN and OUT of the differential fluid volume (no convective flow in the radial direction) :

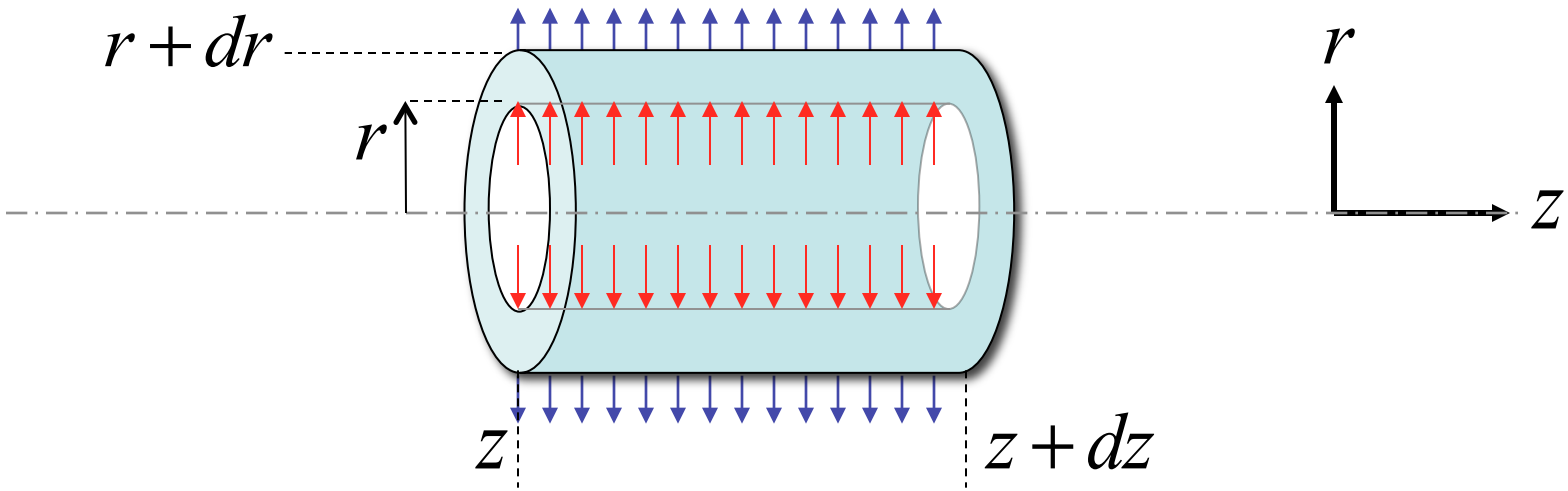

material entering at (***r***) by diffusion:

$$-D_A \cdot 2\pi r \cdot dz \cdot \left.\frac{\partial C_A(z,r)}{\partial r}\right|_r \Delta t\,[mol]$$

material leaving at (*r+dr*) by diffusion:

$$-D_A (2\pi r) \cdot dz \cdot \left.\frac{\partial C_A(z,r)}{\partial r}\right|_{r+dr} \Delta t\,[mol]$$

Homogenous Reactions

Finally, we have to account for the mass of reactant *A* that disappears by the chemical reaction in the differential volume of fluid:

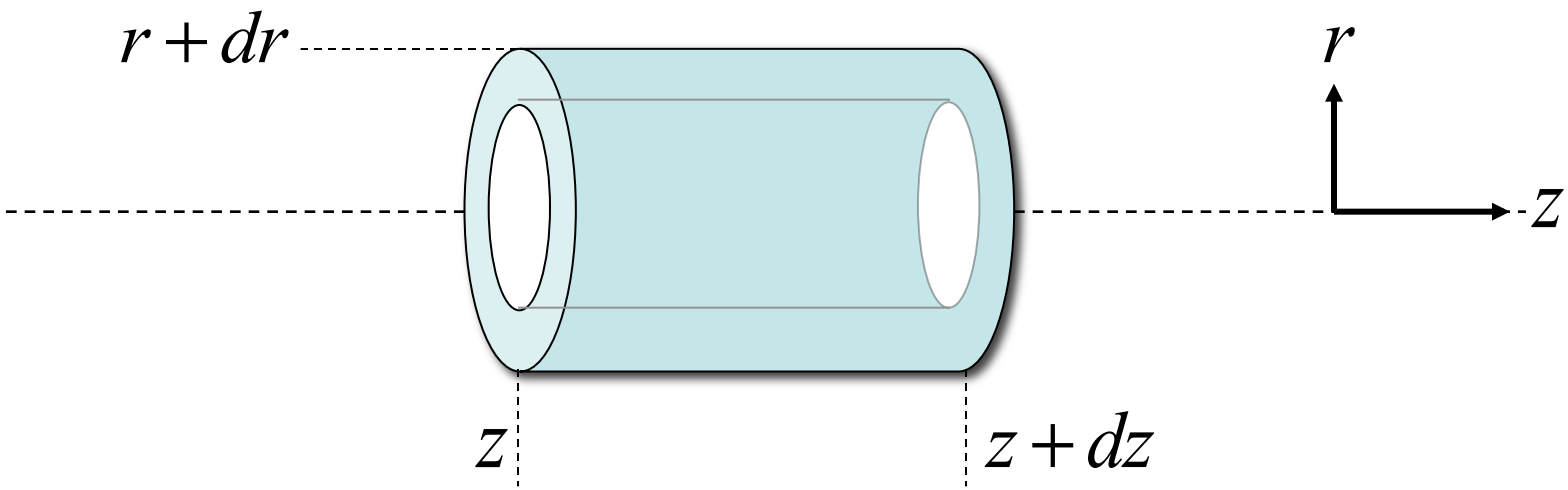

$$A \overset{k}{\Rightarrow} B \qquad -\frac{dC_A}{dt} = kC_A \qquad \Rightarrow \qquad \underbrace{2\pi r \cdot dr \cdot dz}_{\text{differential volume } dV} \cdot kC_A \cdot \Delta t \left[mol\right]$$

The overall material balance of the reactant *A* in the differential volume of fluid is given by:

Input - Output = Accumulation

Input *Output*

$$v_z(r)\cdot 2\pi r\cdot dr\cdot C_A(z,r)\Big|_z \Delta t - v_z(r)\cdot 2\pi r\cdot dr\cdot C_A(z,r)\Big|_{z+dz}\Delta t$$

$$-D_A 2\pi r\cdot dr\frac{\partial C_A(z,r)}{\partial z}\Bigg|_z \Delta t - \left(-D_A 2\pi r\cdot dr\frac{\partial C_A(z,r)}{\partial z}\Bigg|_{z+dz}\Delta t\right)$$

$$-D_A 2\pi r\cdot dz\frac{\partial C_A(z,r)}{\partial r}\Bigg|_r \Delta t - \left(-D_A 2\pi r\cdot dz\frac{\partial C_A(z,r)}{\partial r}\Bigg|_{r+dr}\Delta t\right)$$

$$-\underbrace{(2\pi r\cdot dr\cdot dz)}_{\text{differential volume}}\cdot kC_A\cdot\Delta t = \underbrace{(2\pi r\cdot dr\cdot dz)}_{\text{differential volume}}\underbrace{\left(C_A\big|_{t+\Delta t} - C_A\big|_t\right)}_{\text{accumulationt term}}$$

Divide the whole equation by: $\{2\pi \cdot dr \cdot dz \cdot \Delta t\}$

$$\frac{v_z(r)\cdot \cancel{2\pi} r\cdot \cancel{dr}\cdot C_A(z,r)\cdot \cancel{\Delta t}\big|_z}{\cancel{2\pi}\cdot \cancel{dr}\cdot dz\cdot \cancel{\Delta t}} - \frac{v_z(r)\cdot \cancel{2\pi} r\cdot \cancel{dr}\cdot C_A(z,r)\cdot \cancel{\Delta t}\big|_{z+dz}}{\cancel{2\pi}\cdot \cancel{dr}\cdot dz\cdot \cancel{\Delta t}}$$

$$\frac{-D_A \cancel{2\pi} r\cdot \cancel{dr}\dfrac{\partial C_A(z,r)}{\partial z}\cdot \cancel{\Delta t}\big|_z}{\cancel{2\pi}\cdot \cancel{dr}\cdot dz\cdot \cancel{\Delta t}} - \frac{\left(-D_A \cancel{2\pi} r\cdot \cancel{dr}\dfrac{\partial C_A(z,r)}{\partial z}\cdot \cancel{\Delta t}\big|_{z+dz}\right)}{\cancel{2\pi}\cdot \cancel{dr}\cdot dz\cdot \cancel{\Delta t}}$$

$$\frac{-D_A \cancel{2\pi} r\cdot \cancel{dz}\dfrac{\partial C_A(z,r)}{\partial r}\cdot \cancel{\Delta t}\big|_r}{\cancel{2\pi}\cdot dr\cdot \cancel{dz}\cdot \cancel{\Delta t}} - \frac{\left(-D_A \cancel{2\pi} r\cdot \cancel{dz}\dfrac{\partial C_A(z,r)}{\partial r}\cdot \cancel{\Delta t}\big|_{r+dr}\right)}{\cancel{2\pi}\cdot dr\cdot \cancel{dz}\cdot \cancel{\Delta t}}$$

$$\frac{-\cancel{2\pi} r\cdot \cancel{dr}\cdot \cancel{dz}\cdot kC_A\cdot \cancel{\Delta t}}{\cancel{2\pi}\cdot \cancel{dr}\cdot \cancel{dz}\cdot \cancel{\Delta t}} = \frac{\cancel{2\pi} r\cdot \cancel{dr}\cdot \cancel{dz}\left(C_A\big|_{t+\Delta t} - C_A\big|_t\right)}{\cancel{2\pi}\cdot \cancel{dr}\cdot \cancel{dz}\cdot \Delta t}$$

Homogenous Reactions

$$v_z(r)\cdot r\frac{\left[C_A(z,r)\big|_z - C_A(z,r)\big|_{z+dz}\right]}{dz} + D_A r\frac{\left.\frac{\partial C_A(z,r)}{\partial z}\right|_{z+dz} - \left.\frac{\partial C_A(z,r)}{\partial z}\right|_{z}}{dz} +$$

$$+D_A\frac{\left[r\left.\frac{\partial C_A(z,r)}{\partial r}\right|_{r+dr} - r\left.\frac{\partial C_A(z,r)}{\partial r}\right|_{r}\right]}{dr} - r\cdot kC_A = \frac{r\left(C_A\big|_{t+\Delta t} - C_A\big|_t\right)}{\Delta t}$$

Homogenous Reactions

Let $\Delta t \to 0,\ dr \to 0,\ dz \to 0,$

$$-v_z(r)\cdot r\frac{\partial C_A(z,r)}{\partial z}+D_A r\frac{\partial^2 C_A(z,r)}{\partial z^2}+D_A\frac{\partial\left(r\frac{\partial C_A(z,r)}{\partial r}\right)}{\partial r}-r\cdot kC_A=r\frac{\partial C_A}{\partial t}$$

Divide by *r*

$$-v_z(r)\frac{\partial C_A(z,r)}{\partial z}+D_A\frac{\partial^2 C_A(z,r)}{\partial z^2}+\frac{D_A}{r}\frac{\partial\left(r\frac{\partial C_A(z,r)}{\partial r}\right)}{\partial r}-kC_A=\frac{\partial C_A}{\partial t}$$

And at steady state:

$$-v_z(r)\frac{\partial C_A(z,r)}{\partial z}+D_A\frac{\partial^2 C_A(z,r)}{\partial z^2}+\frac{D_A}{r}\frac{\partial\left(r\frac{\partial C_A(z,r)}{\partial r}\right)}{\partial r}-kC_A=0$$

Homogenous Reactions

Finally, the mathematical model takes the form:

$$-v_z(r)\frac{\partial C_A(z,r)}{\partial z}+D_A\frac{\partial^2 C_A(z,r)}{\partial z^2}+D_A\frac{\partial^2 C_A(z,r)}{\partial r^2}+\frac{D_A}{r}\frac{\partial C_A(z,r)}{\partial r}-kC_A=0$$

With a choice of boundary conditions (we need only two):

$$at\ z=0 \quad \frac{\partial C_A(0,r)}{\partial z}=0$$

$$at\ z=0 \quad C_A(0,r)=C_{Ao}$$

$$at\ z=L \quad \frac{\partial C_A(L,r)}{\partial z}=0$$

$$at\ z=L \quad \bar{C}_A(L)=C_A^*$$

Homogenous Reactions

And boundary conditions in *r* direction:

$$\boxed{at\ r = 0 \quad \frac{\partial C_A(z,0)}{\partial r} = 0}$$

$$\boxed{at\ r = 0 \quad C_A(z,0) = finite}$$

$$\boxed{at\ r = R \quad \frac{\partial C_A(z,R)}{\partial r} = 0}$$

Also: $$C_A^*(L) = \frac{\int_0^R 2\pi r \cdot v_z(r) \cdot C_A(L,r) \cdot dr}{\int_0^R 2\pi r \cdot v_z(r) \cdot dr}$$

Homogenous Reactions

The differential equation contains the function: $v_z(r)$

The velocity profile is relatively easy to obtain; see class handout notes. For the laminar velocity in pipe:

$$\boxed{v_z(r) = \frac{R^2}{4\cdot\mu}\left(\frac{\Delta P}{L}\right)\cdot\left[1-\frac{r^2}{R^2}\right]}$$

$$at\ \ r=0\ \ \ v_z(r=0) = \boxed{v_{z\max} = \frac{R^2}{4\cdot\mu}\left(\frac{\Delta P}{L}\right)}$$

Summary for Homogenous Reaction in Microreactors

$$A \overset{k}{\Longrightarrow} B \qquad -\frac{dC_A}{dt} = kC_A \left[\frac{mol}{m^3 s}\right]$$

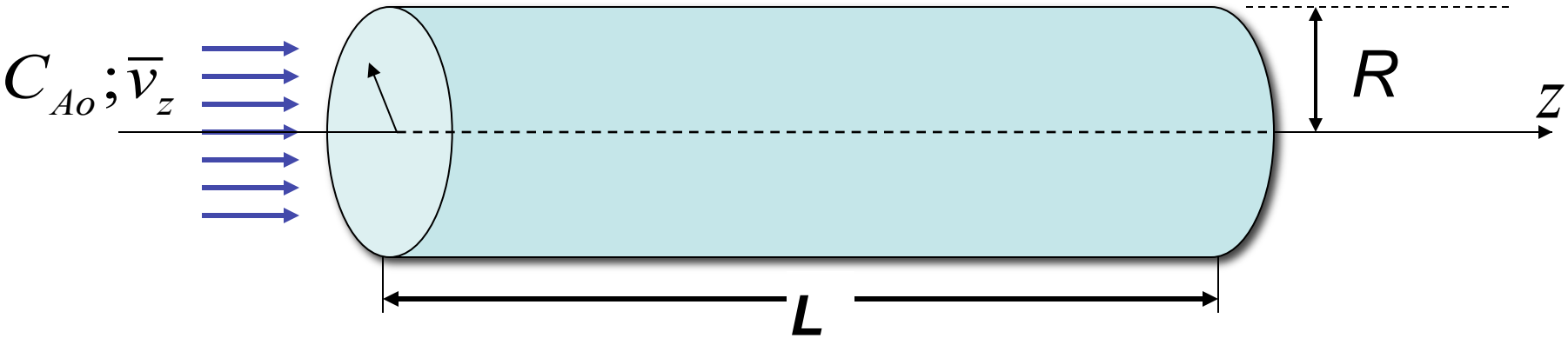

$$\boxed{-v_z(r)\frac{\partial C_A(z,r)}{\partial z} + D_A \frac{\partial^2 C_A(z,r)}{\partial z^2} + D_A \frac{\partial^2 C_A(z,r)}{\partial r^2} + \frac{D_A}{r}\frac{\partial C_A(z,r)}{\partial r} - kC_A = 0}$$

$$@z = 0 \quad \frac{\partial C_A(0,r)}{\partial z} = 0; \;\; or \;\; C_A(0,r) = C_{Ao} \qquad @r = 0 \quad \frac{\partial C_A(z,0)}{\partial r} = 0;$$

$$@z = L \quad \frac{\partial C_A(L,r)}{\partial z} = 0; \; and \,/\, or \; \bar{C}_A(L) = C_A^* \qquad @r = R \quad \frac{\partial C_A(z,R)}{\partial r} = 0$$

Oregon State UNIVERSITY OSU College of Engineering

People. Ideas. Innovation.

Thank you for your attention!